HSC Range

Sealed Lead Acid 6 & 12 Volt
Monobloc . 5 Year Range

Sealed Lead Acid 6 & 12 Volt
Monobloc 5 Year Range

Data

Amps	Amp load for given Autonomy to 1.85 vpc @ 20/25 °C																	
Model No.	5	10	15	20	25	30	35	40	45	60	90	2 hr	3 hr	4 hr	5 hr	8 hr	10 hr	12 hr	20 hr
HSC6-4.5	9.82	6.71	5.49	4.73	4.26	3.87	3.57	3.30	3.05	2.50	1.88	1.51	1.10	0.87	0.72	0.47	0.38	0.32	0.20
HSC6-7.5	26.2	15.4	11.7	9.7	8.40	7.42	6.61	5.98	5.48	4.39	3.23	2.56	1.83	1.43	1.18	0.79	0.65	0.55	0.35
HSC6-10	27.4	18.6	14.6	12.3	10.7	9.5	8.5	7.68	7.04	5.61	4.17	3.39	2.58	1.99	1.74	1.07	0.92	0.75	0.48
HSC6-12	32.7	23.8	19.4	15.9	13.7	12.0	10.7	9.60	8.77	6.86	5.03	4.05	2.99	2.38	1.99	1.33	1.10	0.93	0.57
HSC12-5	20.1	11.5	8.59	7.04	6.01	5.27	4.67	4.18	3.79	2.97	2.09	1.62	1.15	0.89	0.73	0.48	0.40	0.34	0.20
HSC12-7	23.1	14.0	10.6	8.71	7.60	6.78	6.09	5.58	5.16	4.22	3.10	2.43	1.73	1.36	1.12	0.75	0.62	0.52	0.32
HSC12-7.5	26.2	15.4	11.7	9.69	8.40	7.42	6.61	5.98	5.48	4.39	3.23	2.56	1.83	1.43	1.18	0.79	0.65	0.55	0.35
HSC12-10	27.4	18.6	14.6	12.3	10.7	9.47	8.46	7.68	7.04	5.61	4.17	3.39	2.55	1.95	1.71	1.05	0.91	0.73	0.48
HSC12-12	32.7	23.8	19.4	15.9	13.7	12.0	10.7	9.60	8.77	6.86	5.03	4.05	2.99	2.38	1.99	1.33	1.10	0.93	0.57
HSC12-18	46.1	30.1	23.9	20.5	18.1	16.1	14.6	13.3	12.2	9.69	6.98	5.56	4.01	3.16	2.61	1.74	1.42	1.20	0.75
HSC12-26	70.1	47.0	37.3	30.6	26.5	23.4	20.9	19.0	17.5	14.3	10.8	8.61	6.25	4.97	4.15	2.85	2.38	2.04	1.32
HSC12-33	73.9	57.8	44.7	36.5	30.9	27.1	24.1	21.7	19.8	15.8	11.7	9.49	6.87	5.43	4.54	3.09	2.59	2.25	1.54
HSC12-44	118	76.4	59.6	49.6	42.7	37.5	33.5	30.4	27.8	22.1	15.9	12.7	9.14	7.25	6.05	4.19	3.51	3.00	1.87
HSC12-70J	145	99.9	84.5	73.7	65.2	58.5	52.9	48.0	44.2	35.6	26.2	21.1	15.5	12.3	10.2	6.96	5.73	4.85	3.01
HSC12-70	167	121	97	81.8	71.4	63.5	58.2	53.2	49.4	40.0	29.2	22.9	16.1	12.8	10.6	7.16	5.98	5.06	3.17
HSC12-80	171	139	117	101	89.1	79.5	72.8	66.8	61.8	49.8	35.2	27.5	19.3	15.2	12.7	8.82	7.35	6.31	3.99
HSC12-100	218	171	142	122	105	93.6	83.4	75.3	69.2	56.2	41.7	33.3	23.7	18.8	15.6	10.7	8.90	7.63	4.91
HSC12-110	233	187	157	133	115	102	92.2	83.2	76.5	60.9	44.7	36.0	26.5	21.2	17.8	12.2	10.0	8.51	5.27
HSC12-135	298	232	194	162	140	123	111	102	94.5	76.9	56.1	44.2	31.1	24.2	19.9	13.2	10.8	9.27	5.98
HSC12-200	325	280	241	217	199	182	169	158	148	120	85.6	67.0	47.6	37.1	30.8	20.8	17.3	14.8	9.68

Amps	Amp load for given Autonomy to 1.80 vpc @ 20/25 °C																	
Model No.	5	10	15	20	25	30	35	40	45	60	90	2 hr	3 hr	4 hr	5 hr	8 hr	10 hr	12 hr	20 hr
HSC6-4.5	10.5	7.16	5.87	5.05	4.55	4.14	3.81	3.53	3.26	2.67	2.01	1.62	1.18	0.93	0.77	0.50	0.41	0.34	0.21
HSC6-7.5	28.0	16.4	12.5	10.3	8.97	7.93	7.06	6.39	5.85	4.69	3.45	2.74	1.95	1.53	1.26	0.84	0.69	0.58	0.37
HSC6-10	29.2	19.9	15.6	13.1	11.4	10.1	9.04	8.21	7.52	6.00	4.45	3.62	2.75	2.12	1.86	1.15	0.99	0.80	0.52
HSC6-12	35.0	25.4	20.7	17.0	14.6	12.8	11.4	10.3	9.36	7.33	5.37	4.32	3.20	2.54	2.12	1.42	1.18	0.99	0.61
HSC12-5	21.4	12.2	9.17	7.52	6.42	5.63	4.99	4.46	4.05	3.18	2.23	1.73	1.23	0.95	0.78	0.52	0.42	0.36	0.22
HSC12-7	24.7	14.9	11.3	9.31	8.11	7.24	6.51	5.96	5.51	4.50	3.32	2.60	1.85	1.45	1.20	0.80	0.66	0.55	0.34
HSC12-7.5	28.0	16.4	12.5	10.3	8.97	7.93	7.06	6.39	5.85	4.69	3.45	2.74	1.95	1.53	1.26	0.84	0.69	0.58	0.37
HSC12-10	29.2	19.9	15.6	13.1	11.4	10.1	9.04	8.21	7.52	6.00	4.45	3.62	2.73	2.08	1.82	1.13	0.97	0.78	0.51
HSC12-12	35.0	25.4	20.7	17.0	14.6	12.8	11.4	10.3	9.36	7.33	5.37	4.32	3.20	2.54	2.12	1.42	1.18	0.99	0.61
HSC12-18	49.3	32.1	25.6	21.9	19.3	17.2	15.6	14.2	13.0	10.4	7.46	5.94	4.28	3.38	2.79	1.86	1.52	1.28	0.80
HSC12-26	74.9	50.2	39.9	32.7	28.3	25.0	22.3	20.3	18.7	15.3	11.5	9.20	6.67	5.31	4.44	3.05	2.55	2.18	1.42
HSC12-33	79.0	61.7	47.8	38.9	33.1	29.0	25.8	23.2	21.1	16.9	12.5	10.1	7.34	5.80	4.85	3.30	2.77	2.40	1.65
HSC12-44	126	81.6	63.6	53.0	45.6	40.0	35.8	32.4	29.6	23.6	17.0	13.6	9.76	7.74	6.46	4.47	3.75	3.21	2.00
HSC12-70J	155	107	90.3	78.8	69.6	62.5	56.5	51.3	47.2	38.0	28.0	22.6	16.6	13.1	10.9	7.44	6.12	5.18	3.22
HSC12-70	178	130	103	87.4	76.3	67.9	62.2	56.9	52.8	42.7	31.2	24.4	17.2	13.7	11.4	7.65	6.39	5.41	3.38
HSC12-80	189	153	127	107	93.7	83.7	75.7	69.9	64.3	51.3	36.0	28.0	19.7	15.5	13.0	9.00	7.53	6.46	4.13
HSC12-100	265	193	155	130	112	98.4	87.4	78.6	71.7	58.1	42.9	34.2	24.2	19.1	15.9	11.0	9.14	7.82	5.06
HSC12-110	284	211	172	142	123	108	96.6	86.9	79.3	62.9	46.0	37.0	27.0	21.6	18.1	12.5	10.3	8.7	5.43
HSC12-135	350	254	207	173	150	132	118	109	101	82.2	60.0	47.2	33.2	25.8	21.2	14.1	11.6	9.9	6.39
HSC12-200	408	325	271	242	216	196	179	167	156	125	89.1	69.3	49.0	38.0	31.6	21.5	17.9	15.3	10.0

Amps	Amp load for given Autonomy to 1.75 vpc @ 20/25 °C																	
Model No.	5	10	15	20	25	30	35	40	45	60	90	2 hr	3 hr	4 hr	5 hr	8 hr	10 hr	12 hr	20 hr
HSC6-4.5	11.2	7.62	6.24	5.37	4.84	4.40	4.05	3.75	3.47	2.84	2.13	1.72	1.25	0.99	0.81	0.53	0.43	0.37	0.22
HSC6-7.5	29.8	17.5	13.3	11.0	9.54	8.43	7.51	6.80	6.23	4.99	3.67	2.91	2.07	1.63	1.34	0.89	0.73	0.62	0.39
HSC6-10	31.1	21.2	16.6	14.0	12.1	10.8	9.6	8.7	8.00	6.38	4.73	3.85	2.90	2.22	1.94	1.20	1.03	0.83	0.54
HSC6-12	37.2	27.0	22.0	18.1	15.6	13.6	12.2	10.9	9.96	7.80	5.71	4.60	3.40	2.70	2.26	1.51	1.25	1.06	0.65
HSC12-5	22.8	13.0	9.8	8.00	6.83	5.99	5.31	4.75	4.31	3.38	2.37	1.85	1.30	1.01	0.83	0.55	0.45	0.38	0.23
HSC12-7	26.3	15.9	12.0	9.90	8.63	7.70	6.92	6.34	5.87	4.79	3.53	2.76	1.97	1.54	1.27	0.85	0.70	0.59	0.36
HSC12-7.5	29.8	17.5	13.3	11.0	9.54	8.43	7.51	6.80	6.23	4.99	3.67	2.91	2.07	1.63	1.34	0.89	0.73	0.62	0.39
HSC12-10	31.1	21.2	16.6	14.0	12.1	10.8	9.62	8.73	8.00	6.38	4.73	3.85	2.90	2.22	1.94	1.20	1.03	0.83	0.54
HSC12-12	37.2	27.0	22.0	18.1	15.6	13.6	12.2	10.9	10.0	7.80	5.71	4.60	3.40	2.70	2.26	1.51	1.25	1.06	0.65
HSC12-18	52.4	34.2	27.2	23.3	20.6	18.3	16.6	15.1	13.8	11.0	7.94	6.32	4.55	3.59	2.97	1.97	1.62	1.37	0.85
HSC12-26	79.7	53.4	42.4	34.8	30.1	26.6	23.8	21.6	19.9	16.3	12.2	9.79	7.10	5.65	4.72	3.24	2.71	2.32	1.51
HSC12-33	84.0	65.6	50.8	41.4	35.2	30.8	27.4	24.6	22.5	18.0	13.3	10.8	7.81	6.17	5.16	3.51	2.94	2.55	1.75
HSC12-44	134	86.8	67.7	56.4	48.5	42.6	38.1	34.5	31.5	25.1	18.1	14.4	10.4	8.24	6.87	4.76	3.99	3.41	2.12
HSC12-70J	165	113	96.0	83.8	74.1	66.4	60.1	54.6	50.2	40.5	29.8	24.0	17.6	14.0	11.6	7.91	6.51	5.51	3.43
HSC12-70	190	138	110	93.0	81.1	72.2	66.2	60.5	56.1	45.4	33.2	26.0	18.3	14.6	12.1	8.14	6.80	5.75	3.60
HSC12-80	202	159	133	112	97.5	86.9	78.3	71.8	65.7	52.1	36.6	28.5	20.1	15.8	13.2	9.17	7.66	6.56	4.19
HSC12-100	282	204	162	134	115	100	89.1	80.2	73.3	59.0	43.6	34.8	24.7	19.4	16.1	11.1	9.30	8.00	5.20
HSC12-110	303	223	179	146	126	110	98.5	88.7	81.0	64.0	46.8	37.6	27.5	21.9	18.4	12.7	10.5	8.93	5.55
HSC12-135	372	270	220	185	159	140	126	116	107	87.4	63.8	50.2	35.3	27.5	22.6	15.0	12.3	10.5	6.80
HSC12-200	444	342	287	253	227	204	186	173	160	128	90.7	70.5	49.8	38.7	32.1	21.8	18.2	15.6	10.2

Amps	Amp load for given Autonomy to 1.70 vpc @ 20/25 °C																	
Model No.	5	10	15	20	25	30	35	40	45	60	90	2 hr	3 hr	4 hr	5 hr	8 hr	10 hr	12 hr	20 hr
HSC6-4.5	11.4	7.79	6.38	5.49	4.95	4.50	4.14	3.83	3.54	2.91	2.18	1.76	1.28	1.01	0.83	0.54	0.44	0.37	0.23
HSC6-7.5	30.4	17.8	13.6	11.3	9.75	8.62	7.67	6.94	6.36	5.10	3.75	2.97	2.12	1.67	1.37	0.91	0.75	0.63	0.40
HSC6-10	31.8	21.6	16.9	14.3	12.4	11.0	9.8	8.92	8.18	6.52	4.84	3.93	2.99	2.31	2.02	1.25	1.07	0.87	0.56
HSC6-12	38.0	27.6	22.5	18.5	15.9	13.9	12.4	11.1	10.18	7.97	5.84	4.70	3.47	2.76	2.31	1.55	1.28	1.08	0.66
HSC12-5	23.3	13.3	9.97	8.18	6.98	6.12	5.42	4.85	4.41	3.45	2.42	1.89	1.33	1.04	0.85	0.56	0.46	0.39	0.24
HSC12-7	26.9	16.2	12.3	10.1	8.82	7.87	7.07	6.48	6.00	4.90	3.61	2.82	2.01	1.58	1.30	0.87	0.71	0.60	0.37
HSC12-7.5	30.4	17.8	13.6	11.3	9.75	8.62	7.67	6.94	6.36	5.10	3.75	2.97	2.12	1.67	1.37	0.91	0.75	0.63	0.40
HSC12-10	31.8	21.6	16.9	14.3	12.4	11.0	9.83	8.92	8.18	6.52	4.84	3.93	2.96	2.26	1.98	1.22	1.05	0.85	0.55
HSC12-12	38.0	27.6	22.5	18.5	15.9	13.9	12.4	11.1	10.2	7.97	5.84	4.70	3.47	2.76	2.31	1.55	1.28	1.08	0.66
HSC12-18	53.5	34.9	27.7	23.8	21.0	18.7	17.0	15.4	14.1	11.2	8.10	6.45	4.65	3.67	3.03	2.01	1.65	1.39	0.87
HSC12-26	81.4	54.6	43.3	35.6	30.8	27.2	24.3	22.1	20.4	16.6	12.5	10.0	7.25	5.78	4.82	3.31	2.77	2.37	1.54
HSC12-33	85.8	67.1	51.9	42.3	35.9	31.5	28.0	25.2	22.9	18.4	13.5	11.0	7.98	6.31	5.27	3.58	3.01	2.61	1.79
HSC12-44	137	88.7	69.2	57.6	49.5	43.5	38.9	35.3	32.2	25.7	18.5	14.7	10.6	8.42	7.02	4.86	4.08	3.49	2.17
HSC12-70J	168	116	98.2	85.6	75.7	67.9	61.5	55.8	51.3	41.4	30.4	24.5	18.0	14.3	11.9	8.09	6.65	5.63	3.50
HSC12-70	194	141	112	95.0	82.9	73.8	67.6	61.8	57.4	46.4	33.9	26.6	18.7	14.9	12.3	8.32	6.95	5.88	3.68
HSC12-80	217	168	139	116	101	89.1	80.0	73.1	66.7	53.0	37.1	28.9	20.4	16.0	13.4	9.36	7.79	6.68	4.28
HSC12-100	298	212	167	138	117	103	90.7	81.6	74.4	60.0	44.5	35.4	25.0	19.7	16.4	11.3	9.45	8.14	5.29
HSC12-110	320	232	184	150	129	112	100	90.2	82.2	65.1	47.7	38.3	27.9	22.2	18.7	12.9	10.7	9.09	5.67
HSC12-135	380	276	225	189	163	143	129	119	110	89.4	65.2	51.3	36.1	28.1	23.1	15.3	12.6	10.8	6.95
HSC12-200	460	356	299	261	232	208	190	176	163	130	92.1	71.7	50.8	39.5	32.7	22.2	18.5	15.8	10.4

Amps	Amp load for given Autonomy to 1.65 vpc @ 20/25 °C													
Model No.	5	10	15	20	25	30	35	40	45	60	90	2 hr	3 hr	4 hr
HSC6-4.5	11.6	7.89	6.46	5.56	5.01	4.55	4.20	3.88	3.59	2.94	2.21	1.78	1.29	1.02
HSC6-7.5	30.8	18.1	13.7	11.4	9.88	8.73	7.77	7.03	6.44	5.17	3.80	3.01	2.15	1.69
HSC6-10	32.2	21.9	17.1	14.4	12.5	11.1	10.0	9.04	8.28	6.60	4.90	3.98	3.03	2.34
HSC6-12	38.5	27.9	22.8	18.7	16.1	14.1	12.6	11.3	10.3	8.07	5.91	4.76	3.52	2.79
HSC12-5	23.6	13.5	10.1	8.28	7.07	6.20	5.49	4.91	4.46	3.50	2.45	1.91	1.35	1.05
HSC12-7	27.2	16.5	12.4	10.2	8.93	7.97	7.16	6.56	6.07	4.96	3.65	2.86	2.04	1.60
HSC12-7.5	30.8	18.1	13.7	11.4	9.88	8.73	7.77	7.03	6.44	5.17	3.80	3.01	2.15	1.69
HSC12-10	32.2	21.9	17.1	14.4	12.5	11.1	10.0	9.04	8.28	6.60	4.90	3.98	3.00	2.29
HSC12-12	38.5	27.9	22.8	18.7	16.1	14.1	12.6	11.3	10.3	8.07	5.91	4.76	3.52	2.79
HSC12-18	54.3	35.4	28.2	24.1	21.3	19.0	17.2	15.7	14.3	11.4	8.21	6.54	4.71	3.72
HSC12-26	82.4	55.3	43.9	36.0	31.2	27.5	24.6	22.4	20.6	16.8	12.7	10.1	7.35	5.85
HSC12-33	86.9	67.9	52.6	42.9	36.4	31.9	28.4	25.5	23.2	18.6	13.7	11.2	8.08	6.39
HSC12-44	139	89.9	70.0	58.4	50.2	44.1	39.4	35.7	32.6	26.0	18.7	14.9	10.8	8.52
HSC12-70J	170	117	99.4	86.7	76.7	68.8	62.2	56.5	51.9	41.9	30.8	24.9	18.3	14.5
HSC12-70	196	143	114	96.3	84.0	74.7	68.5	62.6	58.1	47.0	34.4	26.9	19.0	15.1
HSC12-80	239	176	144	120	103	90.6	81.2	74.1	67.8	53.5	37.4	29.2	20.6	16.2
HSC12-100	315	219	170	139	119	104	91.8	82.5	75.3	60.8	44.8	35.6	25.2	19.9
HSC12-110	338	239	187	152	130	114	102	91.2	83.2	65.9	48.1	38.5	28.1	22.5
HSC12-135	385	279	228	191	165	145	130	121	111	90.5	66.0	52.0	36.6	28.4
HSC12-200	474	369	307	266	236	212	193	178	166	131	92.9	72.3	51.3	39.9

Amps	Amp load for given Autonomy to 1.60 vpc @ 20/25 °C													
Model No.	5	10	15	20	25	30	35	40	45	60	90	2 hr	3 hr	4 hr
HSC6-4.5	11.7	7.96	6.52	5.61	5.06	4.60	4.24	3.92	3.62	2.97	2.23	1.80	1.31	1.03
HSC6-7.5	31.1	18.2	13.9	11.5	9.97	8.81	7.85	7.10	6.51	5.22	3.84	3.04	2.17	1.70
HSC6-10	32.5	22.1	17.3	14.6	12.7	11.2	10.0	9.12	8.36	6.67	4.95	4.02	3.06	2.36
HSC6-12	38.9	28.2	23.0	18.9	16.3	14.2	12.7	11.4	10.41	8.15	5.97	4.81	3.55	2.82
HSC12-5	23.8	13.6	10.2	8.36	7.14	6.26	5.54	4.96	4.50	3.53	2.48	1.93	1.36	1.06
HSC12-7	27.5	16.6	12.5	10.3	9.02	8.05	7.23	6.62	6.13	5.01	3.69	2.89	2.06	1.61
HSC12-7.5	31.1	18.2	13.9	11.5	10.0	8.81	7.85	7.10	6.51	5.22	3.84	3.04	2.17	1.70
HSC12-10	32.5	22.1	17.3	14.6	12.7	11.2	10.0	9.12	8.36	6.67	4.95	4.02	3.03	2.31
HSC12-12	38.9	28.2	23.0	18.9	16.3	14.2	12.7	11.4	10.4	8.15	5.97	4.81	3.55	2.82
HSC12-18	54.8	35.7	28.4	24.4	21.5	19.2	17.4	15.8	14.5	11.5	8.29	6.61	4.76	3.76
HSC12-26	83.2	55.8	44.3	36.4	31.5	27.8	24.8	22.6	20.8	17.0	12.8	10.2	7.42	5.91
HSC12-33	87.8	68.6	53.1	43.3	36.7	32.2	28.7	25.7	23.5	18.8	13.8	11.3	8.16	6.45
HSC12-44	140	90.7	70.7	58.9	50.7	44.5	39.8	36.0	33.0	26.3	18.9	15.1	10.9	8.61
HSC12-70J	172	119	100	87.6	77.4	69.4	62.9	57.0	52.4	42.3	31.1	25.1	18.4	14.6
HSC12-70	198	144	115	97.2	84.8	75.4	69.1	63.2	58.7	47.5	34.7	27.2	19.2	15.2
HSC12-80	256	184	148	123	106	92.4	82.6	75.3	68.6	54.2	37.8	29.4	20.8	16.3
HSC12-100	333	225	173	142	121	105	92.9	83.4	76.2	61.3	45.1	35.9	25.4	20.1
HSC12-110	357	247	191	155	132	115	103	92.2	84.3	66.4	48.4	38.8	28.3	22.6
HSC12-135	389	282	230	193	166	146	131	122	112	91.4	66.7	52.5	36.9	28.7
HSC12-200	501	383	314	271	240	215	196	181	167	132	93.6	72.9	51.7	40.2

Specifications

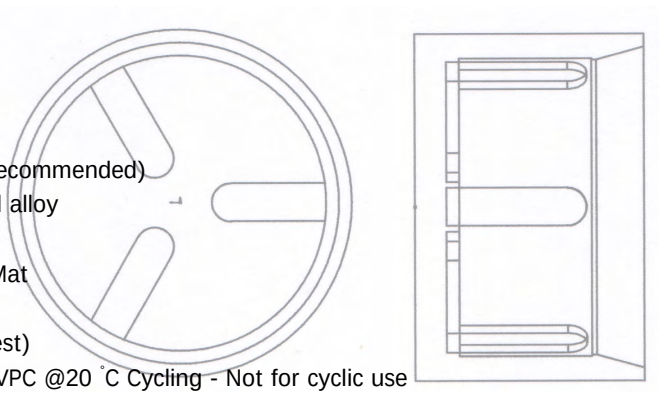

Nominal Voltage	4, 6 & 12 Volts
Design Life	5 Years
Operating Temperature	-20 °C to 50 °C (Recommended)
Grid alloy	Calcium / Tin lead alloy
Plates	Flat Pasted
Separator	Absorbant Glass Mat
Active material	High purity lead
Case and cover	ABS (VO on request)
Charge Voltage	Float 2.27 - 2.30 VPC @20 °C Cycling - Not for cyclic use Max. 2.4 VPC Max ripple 0.05C (A)
Electrolyte	Sulphuric acid Low impurity
Venting Valve	EPDM Rubber 1.5 to 2 psi (10.5 - 14 KPa) release pressure. Resealing at 1 psi (7 KPa)
Terminal	Various types Epoxy sealed by extended mechanical paths
Torque setting	The recommended torque value for all screw types is 5-7 Nm
Cables	Insulated cables / connectors supplied on request.

Haze Battery Company keenly encourages environmental awareness; PLEASE follow guidelines for the recycling /disposal of lead.

Watts Data

Watts per cell	Watts per cell load to 1.85 vpc @ 20/25°C													
Model No.	5	10	15	20	25	30	35	40	45	60	90	2 hr	3 hr	4 hr
HSC6-4.5	19.5	13.7	10.9	9.24	8.10	7.33	6.70	6.19	5.79	4.81	3.56	2.82	1.99	1.52
HSC6-7.5	35.4	25.1	22.0	18.7	16.0	14.1	12.6	11.4	10.5	8.33	6.00	4.78	3.44	2.72
HSC6-10	46.9	34.2	28.1	23.8	20.7	18.3	16.3	14.9	13.6	10.8	7.80	6.21	4.48	3.53
HSC6-12	56.3	43.1	36.0	30.1	25.8	22.6	20.3	18.4	17.0	13.8	10.4	8.43	5.96	4.62
HSC12-5	36.2	22.2	16.9	13.9	12.0	10.6	9.38	8.38	7.57	5.83	4.03	3.11	2.14	1.65
HSC12-7	36.1	24.1	18.8	15.4	13.1	11.6	10.4	9.52	8.87	7.41	5.77	4.74	3.43	2.71
HSC12-7.5	35.4	25.1	22.0	18.7	16.0	14.1	12.6	11.4	10.5	8.33	6.00	4.78	3.44	2.72
HSC12-10	46.9	34.2	28.1	23.8	20.7	18.3	16.3	14.9	13.6	10.8	7.80	6.21	4.48	3.53
HSC12-12	56.3	43.1	36.0	30.1	25.8	22.6	20.3	18.4	17.0	13.8	10.4	8.43	5.96	4.62
HSC12-18	100	63.8	50.7	44.1	39.3	35.2	31.5	28.6	26.2	20.7	14.6	11.4	8.02	6.16
HSC12-26	152	87.9	65.3	53.1	45.4	39.8	35.7	32.4	30.0	24.3	18.0	14.6	10.7	8.60
HSC12-33	170	99.8	73.5	58.8	49.7	43.6	39.0	35.3	32.7	27.2	20.9	18.0	14.7	10.5
HSC12-44	222	143	113	94.8	81.9	72.4	65.1	58.9	54.1	43.1	31.1	24.7	17.8	14.1
HSC12-70J	224	162	129	112	98.3	89.1	81.0	74.3	68.8	56.7	43.3	36.2	28.5	23.9
HSC12-70	285	243	204	174	151	134	119	108	99.6	79.2	55.6	43.1	30.6	24.2
HSC12-80	304	250	217	185	164	146	133	122	113	90.3	65.0	50.4	34.6	26.7
HSC12-100	397	319	270	231	201	179	160	146	135	111	82.2	64.9	45.8	35.6
HSC12-110	448	360	305	260	226	201	181	164	150	121	87.2	68.9	49.5	38.5
HSC12-135	576	454	373	314	271	237	213	194	179	145	107	85.1	60.5	47.7
HSC12-200	570	493	439	395	361	333	309	287	269	223	160	125	87.6	66.8

Watts per cell	Watts per cell load to 1.80 vpc @ 20/25 °C													
Model No.	5	10	15	20	25	30	35	40	45	60	90	2 hr	3 hr	4 hr
HSC6-4.5	20.9	14.7	11.7	9.87	8.65	7.83	7.15	6.61	6.18	5.14	3.80	3.02	2.12	1.63
HSC6-7.5	37.8	26.8	23.5	20.0	17.1	15.0	13.4	12.2	11.2	8.89	6.41	5.11	3.68	2.90
HSC6-10	50.1	36.5	30.0	25.4	22.1	19.5	17.5	15.9	14.5	11.6	8.33	6.64	4.78	3.77
HSC6-12	60.1	46.0	38.5	32.1	27.6	24.1	21.6	19.7	18.2	14.7	11.1	9.01	6.37	4.93
HSC12-5	38.7	23.7	18.0	14.9	12.9	11.3	10.0	8.95	8.08	6.22	4.31	3.32	2.29	1.76
HSC12-7	38.6	25.8	20.0	16.5	14.0	12.4	11.1	10.2	9.48	7.91	6.17	5.06	3.66	2.90
HSC12-7.5	37.8	26.8	23.5	20.0	17.1	15.0	13.4	12.2	11.2	8.89	6.41	5.11	3.68	2.90
HSC12-10	50.1	36.5	30.0	25.4	22.1	19.5	17.5	15.9	14.5	11.6	8.33	6.64	4.78	3.77
HSC12-12	60.1	46.0	38.5	32.1	27.6	24.1	21.6	19.7	18.2	14.7	11.1	9.01	6.37	4.93
HSC12-18	107	68.2	54.1	47.1	42.0	37.6	33.6	30.6	28.0	22.1	15.6	12.2	8.56	6.58
HSC12-26	162	93.9	69.8	56.7	48.5	42.5	38.1	34.7	32.0	26.0	19.3	15.5	11.5	9.19
HSC12-33	182	107	78.5	62.8	53.1	46.6	41.6	37.7	34.9	29.1	22.4	19.2	15.7	11.3
HSC12-44	237	153	120	101	87.5	77.3	69.5	62.9	57.8	46.0	33.2	26.4	19.0	15.1
HSC12-70J	240	173	138	119	105	95.2	86.5	79.3	73.5	60.6	46.3	38.7	30.4	25.6
HSC12-70	305	259	218	186	162	143	128	116	106	84.6	59.3	46.1	32.7	25.9
HSC12-80	336	269	231	197	171	152	138	127	116	92.3	66.1	51.0	35.0	27.0
HSC12-100	460	348	288	243	210	186	166	151	139	114	83.8	66.1	46.6	36.1
HSC12-110	518	393	324	274	237	210	188	170	155	124	89.0	70.2	50.5	39.1
HSC12-135	677	496	399	336	289	253	228	207	191	155	114	90.9	64.7	51.0
HSC12-200	684	547	478	425	383	352	323	300	279	229	165	128	90.0	68.6

Watts per cell	Watts per cell load to 1.75 vpc @ 20/25 °C													
Model No.	5	10	15	20	25	30	35	40	45	60	90	2 hr	3 hr	4 hr
HSC6-4.5	22.2	15.6	12.4	10.5	9.20	8.33	7.61	7.04	6.58	5.47	4.05	3.21	2.26	1.73
HSC6-7.5	40.2	28.5	25.0	21.2	18.2	16.0	14.3	13.0	11.9	9.46	6.82	5.43	3.91	3.09
HSC6-10	53.3	38.8	31.9	27.1	23.5	20.8	18.6	16.9	15.4	12.3	8.86	7.06	5.09	4.01
HSC6-12	64.0	49.0	40.9	34.2	29.3	25.7	23.0	20.9	19.3	15.7	11.8	9.58	6.78	5.25
HSC12-5	41.2	25.2	19.2	15.8	13.7	12.1	10.7	9.53	8.60	6.62	4.58	3.53	2.43	1.88
HSC12-7	41.0	27.4	21.3	17.6	14.9	13.2	11.8	10.8	10.1	8.42	6.56	5.39	3.89	3.08
HSC12-7.5	40.2	28.5	25.0	21.2	18.2	16.0	14.3	13.0	11.9	9.46	6.82	5.43	3.91	3.09
HSC12-10	53.3	38.8	31.9	27.1	23.5	20.8	18.6	16.9	15.4	12.3	8.86	7.06	5.09	4.01
HSC12-12	64.0	49.0	40.9	34.2	29.3	25.7	23.0	20.9	19.3	15.7	11.8	9.58	6.78	5.25
HSC12-18	114	72.5	57.6	50.1	44.6	40.0	35.8	32.5	29.7	23.6	16.6	13.0	9.11	7.00
HSC12-26	173	99.9	74.2	60.3	51.6	45.2	40.6	36.9	34.1	27.7	20.5	16.5	12.2	9.77
HSC12-33	193	113	83.5	66.9	56.5	49.6	44.3	40.1	37.2	30.9	23.8	20.4	16.7	12.0
HSC12-44	252	162	128	108	93.1	82.2	73.9	66.9	61.5	49.0	35.3	28.1	20.3	16.1
HSC12-70J	255	184	147	127	112	101	92.1	84.4	78.1	64.5	49.3	41.2	32.3	27.2
HSC12-70	324	276	232	198	172	152	136	123	113	90.0	63.1	49.0	34.8	27.5
HSC12-80	361	285	243	202	176	156	141	129	119	94.1	66.6	51.5	35.3	27.3
HSC12-100	501	366	298	250	217	190	170	154	142	116	84.8	66.7	47.1	36.5
HSC12-110	566	413	336	282	244	214	192	174	158	126	90.0	70.8	51.0	39.5
HSC12-135	720	528	424	357	308	269	242	220	203	165	121	96.7	68.8	54.3
HSC12-200	734	576	497	441	396	364	333	308	287	235	167	131	91.5	69.9

Watts per cell	Watts per cell load to 1.70 vpc @ 20/25 °C													
Model No.	5	10	15	20	25	30	35	40	45	60	90	2 hr	3 hr	4 hr
HSC6-4.5	22.7	15.9	12.7	10.7	9.40	8.52	7.78	7.19	6.72	5.59	4.14	3.28	2.31	1.77
HSC6-7.5	41.1	29.1	25.5	21.7	18.6	16.3	14.6	13.3	12.1	9.67	6.97	5.55	4.00	3.15
HSC6-10	54.5	39.7	32.6	27.7	24.0	21.2	19.0	17.3	15.8	12.6	9.06	7.22	5.20	4.10
HSC6-12	65.4	50.0	41.8	35.0	30.0	26.2	23.5	21.4	19.8	16.0	12.0	9.79	6.93	5.36
HSC12-5	42.1	25.8	19.6	16.2	14.0	12.3	10.9	9.73	8.79	6.77	4.68	3.61	2.49	1.92
HSC12-7	41.9	28.0	21.8	17.9	15.2	13.5	12.1	11.1	10.3	8.61	6.70	5.50	3.98	3.15
HSC12-7.5	41.1	29.1	25.5	21.7	18.6	16.3	14.6	13.3	12.1	9.67	6.97	5.55	4.00	3.15
HSC12-10	54.5	39.7	32.6	27.7	24.0	21.2	19.0	17.3	15.8	12.6	9.06	7.22	5.20	4.10
HSC12-12	65.4	50.0	41.8	35.0	30.0	26.2	23.5	21.4	19.8	16.0	12.0	9.79	6.93	5.36
HSC12-18	116	74.0	58.8	51.1	45.5	40.8	36.5	33.2	30.3	24.0	17.0	13.2	9.29	7.14
HSC12-26	176	102	75.7	61.5	52.7	46.1	41.4	37.6	34.8	28.2	20.9	16.9	12.4	9.97
HSC12-33	198	116	85.4	68.3	57.7	50.7	45.3	41.0	38.0	31.6	24.3	20.8	17.1	12.2
HSC12-44	258	166	131	110	95.1	84.0	75.6	68.4	62.9	50.1	36.1	28.7	20.7	16.4
HSC12-70J	260	188	150	130	114	103	94.1	86.2	79.9	65.9	50.3	42.1	33.1	27.8
HSC12-70	331	282	237	202	176	155	139	126	116	92.0	64.5	50.1	35.6	28.1
HSC12-80	379	296	252	209	180	158	144	131	121	95.3	67.3	51.8	35.7	27.5
HSC12-100	526	376	305	255	220	193	172	156	143	117	85.7	67.3	47.5	36.8
HSC12-110	593	424	344	288	248	217	194	176	160	127	90.9	71.4	51.4	39.8
HSC12-135	736	540	433	365	314	275	247	225	208	169	124	98.8	70.3	55.4
HSC12-200	777	608	518	457	410	373	341	316	294	238	170	133	93.2	70.8

Watts per cell	Watts per cell load to 1.65 vpc @ 20/25 °C													
Model No.	5	10	15	20	25	30	35	40	45	60	90	2 hr	3 hr	4 hr
HSC6-4.5	23.0	16.1	12.8	10.9	9.52	8.63	7.88	7.28	6.81	5.66	4.19	3.32	2.34	1.79
HSC6-7.5	41.6	29.5	25.8	22.0	18.8	16.5	14.8	13.4	12.3	9.79	7.06	5.62	4.05	3.19
HSC6-10	55.1	40.2	33.0	28.0	24.3	21.5	19.2	17.5	16.0	12.7	9.17	7.31	5.26	4.15
HSC6-12	66.2	50.7	42.4	35.4	30.4	26.6	23.8	21.7	20.0	16.2	12.2	9.92	7.01	5.43
HSC12-5	42.6	26.1	19.9	16.4	14.2	12.5	11.0	9.86	8.90	6.85	4.74	3.65	2.52	1.94
HSC12-7	42.5	28.4	22.1	18.2	15.4	13.7	12.3	11.2	10.4	8.71	6.79	5.57	4.03	3.19
HSC12-7.5	41.6	29.5	25.8	22.0	18.8	16.5	14.8	13.4	12.3	9.79	7.06	5.62	4.05	3.19
HSC12-10	55.1	40.2	33.0	28.0	24.3	21.5	19.2	17.5	16.0	12.7	9.17	7.31	5.26	4.15
HSC12-12	66.2	50.7	42.4	35.4	30.4	26.6	23.8	21.7	20.0	16.2	12.2	9.92	7.01	5.43
HSC12-18	118	75.0	59.6	51.9	46.2	41.4	37.0	33.7	30.8	24.4	17.2	13.4	9.43	7.25
HSC12-26	179	103	76.8	62.4	53.4	46.8	42.0	38.2	35.3	28.6	21.2	17.1	12.6	10.11
HSC12-33	200	117	86.4	69.2	58.4	51.3	45.8	41.6	38.5	32.0	24.6	21.1	17.3	12.4
HSC12-44	261	168	132	111	96.3	85.1	76.5	69.3	63.7	50.7	36.5	29.1	21.0	16.6
HSC12-70J	264	190	152	131	116	105	95.3	87.3	80.9	66.7	51.0	42.6	33.5	28.1
HSC12-70	335	286	240	205	178	157	141	127	117	93.2	65.3	50.7	36.0	28.5
HSC12-80	416	311	259	214	185	162	147	133	123	96.4	68.1	52.4	35.9	27.7
HSC12-100	553	386	310	259	223	196	174	157	145	119	86.5	68.0	47.8	37.1
HSC12-110	623	436	350	292	251	221	197	177	161	128	91.8	72.1	51.7	40.1
HSC12-135	745	546	439	369	318	278	251	228	211	171	126	100	71.2	56.1
HSC12-200	835	630	532	464	416	378	346	320	298	240	172	134	93.8	71.6

Watts per cell	Watts per cell load to 1.60 vpc @ 20/25 °C													
Model No.	5	10	15	20	25	30	35	40	45	60	90	2 hr	3 hr	4 hr
HSC6-4.5	23.2	16.3	13.0	11.0	9.61	8.71	7.95	7.35	6.87	5.71	4.23	3.35	2.36	1.81
HSC6-7.5	42.0	29.8	26.1	22.2	19.0	16.7	14.9	13.6	12.4	9.89	7.12	5.68	4.09	3.23
HSC6-10	55.7	40.6	33.3	28.3	24.6	21.7	19.4	17.6	16.1	12.9	9.26	7.38	5.31	4.19
HSC6-12	66.8	51.2	42.8	35.7	30.6	26.8	24.1	21.9	20.2	16.4	12.3	10.0	7.08	5.48
HSC12-5	43.0	26.3	20.1	16.5	14.3	12.6	11.1	9.95	8.99	6.92	4.79	3.69	2.54	1.96
HSC12-7	42.9	28.7	22.3	18.3	15.6	13.8	12.4	11.3	10.5	8.80	6.86	5.63	4.07	3.22
HSC12-7.5	42.0	29.8	26.1	22.2	19.0	16.7	14.9	13.6	12.4	9.89	7.12	5.68	4.09	3.23
HSC12-10	55.7	40.6	33.3	28.3	24.6	21.7	19.4	17.6	16.1	12.9	9.26	7.38	5.31	4.19
HSC12-12	66.8	51.2	42.8	35.7	30.6	26.8	24.1	21.9	20.2	16.4	12.3	10.0	7.08	5.48
HSC12-18	119	75.8	60.2	52.4	46.6	41.8	37.4	34.0	31.1	24.6	17.4	13.6	9.52	7.32
HSC12-26	180	104	77.6	63.0	54.0	47.3	42.4	38.5	35.6	28.9	21.4	17.3	12.7	10.2
HSC12-33	202	119	87.3	69.9	59.0	51.8	46.3	42.0	38.8	32.3	24.9	21.3	17.5	12.5
HSC12-44	263	170	134	113	97.3	85.9	77.3	69.9	64.3	51.2	36.9	29.4	21.2	16.8
HSC12-70J	266	192	154	132	117	106	96.2	88.2	81.7	67.4	51.5	43.0	33.8	28.4
HSC12-70	339	288	242	207	180	159	142	129	118	94.1	66.0	51.2	36.4	28.7
HSC12-80	442	324	266	219	187	165	149	135	124	97.6	68.6	52.7	36.2	27.9
HSC12-100	581	395	315	263	226	198	176	158	146	119	87.2	68.3	48.1	37.3
HSC12-110	655	446	355	296	254	223	199	179	162	129	92.6	72.5	52.1	40.3
HSC12-135	752	552	443	373	322	281	253	230	213	172	127	101	71.9	56.7
HSC12-200	878	648	549	477	425	386	353	324	302	243	173	135	94.6	72.2

Physical Data

Dimensions	**Metric** mm/kg					**Imperial** inches/lbs					Insert	Terminal	Box
Model No.	Length	Width	Height	Inc tabs	Kg	Length	Width	Height	Inc tabs	Lbs	Terminal	Layout	Qty
HSC6-4.5	70	47	101	107	0.71	2.76	1.85	3.98	4.21	1.6	T1	A	20
HSC6-7.5	150	34	94	100	1.11	5.91	1.34	3.70	3.94	2.5	T1	B	10
HSC6-10	151	50	95	101	1.54	5.94	1.97	3.74	3.98	3.4	T1	B	10
HSC6-12	151	50	95	101	1.73	5.94	1.97	3.74	3.98	3.8	T2	B	10
HSC12-5	90	70	101	107	1.61	3.54	2.76	3.98	4.21	3.6	T1	D	10
HSC12-7	151	65	94	100	2.11	5.94	2.56	3.70	3.94	4.7	T1	D	8
HSC12-7.5	151	65	94	100	2.22	5.94	2.56	3.70	3.94	4.9	T2	D	8
HSC12-10	151	65	110	116	2.60	5.94	2.56	4.33	4.57	5.7	T2	D	8
HSC12-12	152	99	96	102	3.45	5.98	3.90	3.78	4.02	7.6	T2	D	4
HSC12-18	181	76	167	n/a	5.00	7.13	2.99	6.57	n/a	11.1	Insert	C	2
HSC12-26	168	178	124	n/a	7.70	6.61	7.01	4.88	n/a	17.0	Insert	C	1
HSC12-33	195	130	160	n/a	9.10	7.68	5.12	6.30	n/a	20.1	Insert	B	1
HSC12-44	198	167	157	n/a	12.5	7.80	6.57	6.18	n/a	27.6	Insert	C	1
HSC12-70J	349	168	175	n/a	19.1	13.74	6.61	6.89	n/a	42.2	Insert	C	1
HSC12-70	260	168	211	n/a	19.3	10.24	6.61	8.31	n/a	42.7	Insert	B	1
HSC12-80	260	168	211	n/a	22.8	10.24	6.61	8.31	n/a	50.4	Insert	B	1
HSC12-100	306	168	211	n/a	27.8	12.05	6.61	8.31	n/a	61.4	Insert	B	1
HSC12-110	329	173	209	n/a	28.9	12.95	6.81	8.23	n/a	63.9	Insert	B	1
HSC12-135	340	173	283	n/a	36.3	13.39	6.81	11.14	n/a	80.2	Insert	B	1
HSC12-200	522	240	220	n/a	52.8	20.55	9.45	8.66	n/a	116.7	Insert	E	1

Terminal details

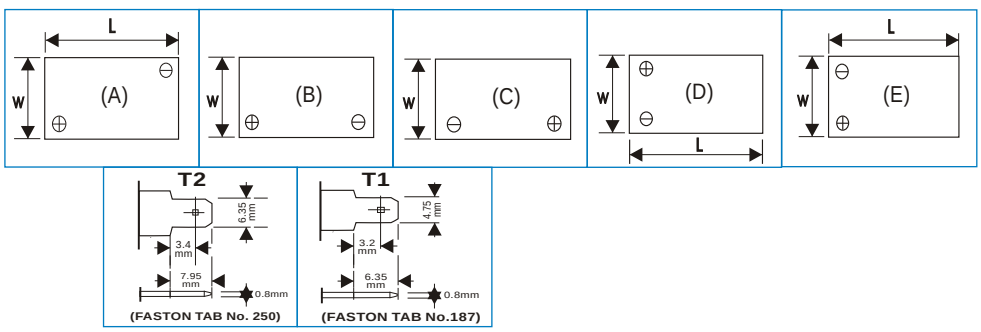

Website: www.hazebattery.com
E mail sales@hazebattery.com

VRLA Product Range

4, 6 & 12 Volt AGM 1.3 to 230AH
6 & 12 Volt Gel 7.5 to 230AH
12 Volt Front Access AGM
12 Volt Front Access Gel
Electric Vehicle Range
2 Volt AGM & Gel 50 to 3850AH

REV 190912